WANG

MODEL 2263 LINE PRINTER USER MANUAL

2200

Model 2263 Line Printer User Manual

3rd Edition — January, 1981

700-4251B

WANG LABORATORIES, INC.
ONE INDUSTRIAL AVENUE, LOWELL, MASSACHUSETTS 01851, TEL. (617) 459-5000, TWX 710 343-6769, TELEX 94-7421

Disclaimer of Warranties and Limitation of Liabilities

The staff of Wang Laboratories, Inc., has taken due care in preparing this manual; however, nothing contained herein modifies or alters in any way the standard terms and conditions of the Wang purchase agreement, lease agreement, or rental agreement by which this equipment was acquired, nor increases in any way Wang's liability to the customer. In no event shall Wang Laboratories, Inc., or its subsidiaries be liable for incidental or consequential damages in connection with or arising from the use of this manual or any programs contained herein.

WANG LABORATORIES, INC.
ONE INDUSTRIAL AVENUE, LOWELL, MASSACHUSETTS 01851, TEL. (617) 459-5000, TWX 710 343-6769, TELEX 94-7421

PREFACE

This manual provides answers to questions concerning the operation of the Model 2263 Line Printer. It is designed for users who are already familiar with the available Wang System and its BASIC-2 language.

For users who are not familiar with the operation of their system, it is recommended that *Programming in BASIC* (700-3231G) and the *Wang BASIC-2 Reference Manual* (700-4080D) be read before proceeding with this manual.

This manual has been divided into several chapters covering all the operational features of the line printer. Chapter 1 contains general information on the printer. Chapter 2 describes device selection and the SELECT statement. Chapter 3 demonstrates how to format printed output. Chapter 4 describes the use of HEX codes. Chapter 5 describes the Vertical Format Tape. Hexadecimal codes, the Printer character set and specifications are collected in the appendices.

CONTENTS

CONTENTS (continued)

APPENDICES

FIGURES

TABLES

CHAPTER 1
GENERAL INFORMATION

1.1 INTRODUCTION

This manual describes the characteristics and operations of the Model 2263 Line Printer (see Figure 1-1). There are three models of the printer; the differences among the models are summarized below. Aside from these differences, all of the printers have identical characteristics.

Model	Speed(lines/min)	Font	Character Set
2263-1	400	Gothic	64 ASCII
2263-2	600	Gothic	64 ASCII
2263-3	430	Courier	96 ASCII

The Model 2263 is an impact printer featuring a laterally revolving chain-type carrier. The print chain is composed of 384 fully formed characters arranged in multiple identical sets on 48 8-character links mounted end-to-end in a loop. A full line on the printer contains 132 print positions. Printing is accomplished by an electromagnetically activated print hammer in each print position impacting the form from behind, pushing a small area of the form against the ribbon as the appropriate character appears in front of the form. Characters are printed six lines and 10 characters to the inch (2.4 lines/centimeter, 4.3 characters/centimeter). Hard-copy printout is produced one line at a time from stored digital data which is transferred to the printer in the form of print character and paper advance instruction codes from the System 2200. A 132-character buffer receives a complete line of data transmitted from the system CPU to the printer. A vertical format tape provides control for spacing on special forms. Continuous-form paper of widths from 3.5 to 19.5 inches (8.9 to 49.5 centimeters) can be used with the printer since the distance between the paper tractors is adjustable. The basic character arrangement for the printer is the standard ASCII character set. Models 2263-1 and 2263-2 use the 64-character uppercase-only set, while the Model 2263-3 uses the 9-character uppercase/lowercase set. (Refer to Appendix A for a listing of the hexadecimal codes for each character set.)

The printer system consists of two major subassemblies: a stationary frame, and a yoke that pivots away from the frame for access to the print area. The paper feed components and the print hammers are mounted on the stationary frame at the back of the paper path. The ribbon feed components and the print-chain are mounted on the yoke at the front of the paper path. A hinged, balanced canopy at the top of the printer manually opens to the yoke and mechanism controls. The yoke manually opens and swings forward and down for full access to the print area for forms loading and ribbon changing.

Forms enter the printer at the front from an enclosed space directly below the yoke, and exit the printer at the rear onto a detachable shelf.

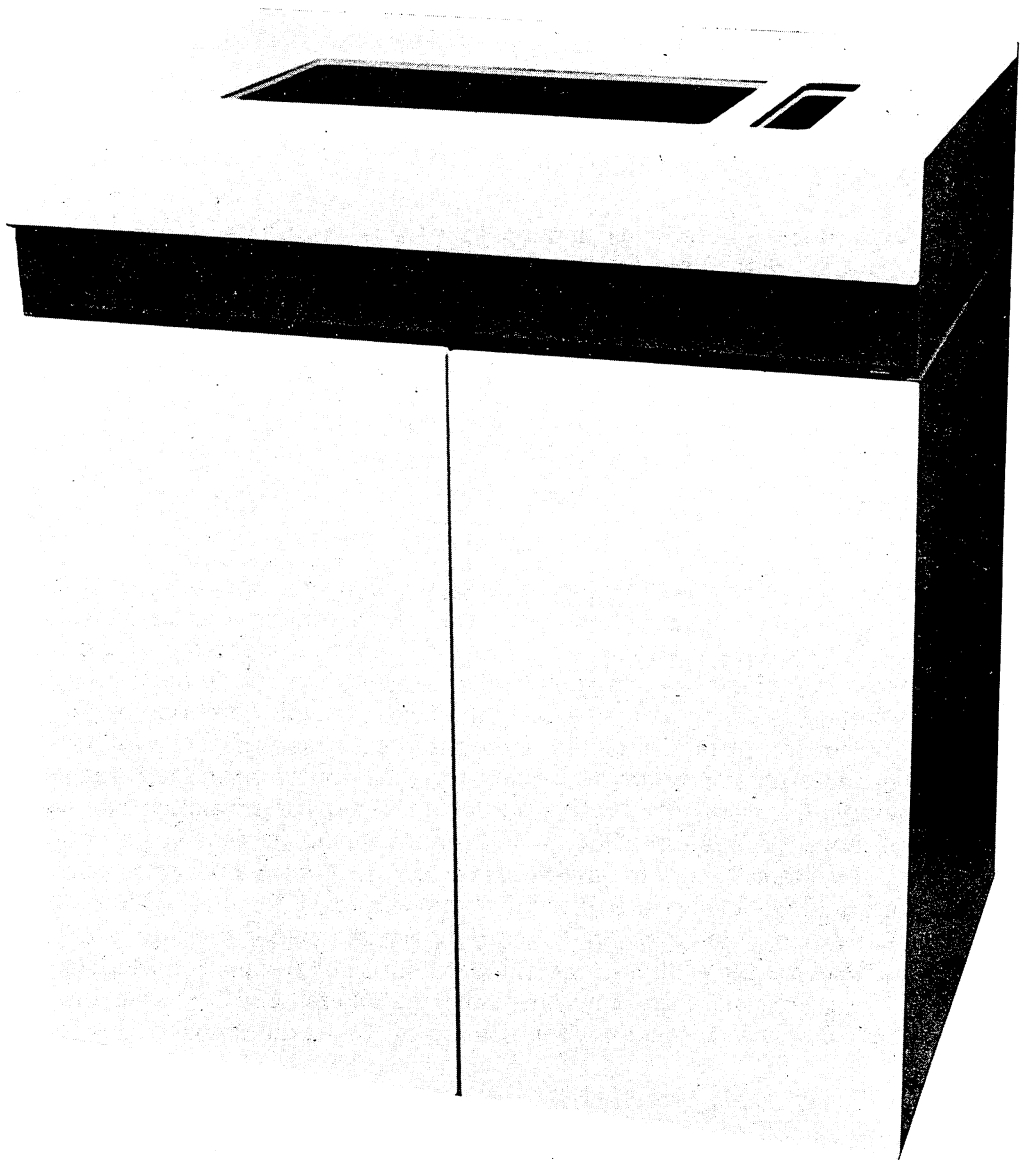

Figure 1-1. Model 2263 Line Printer

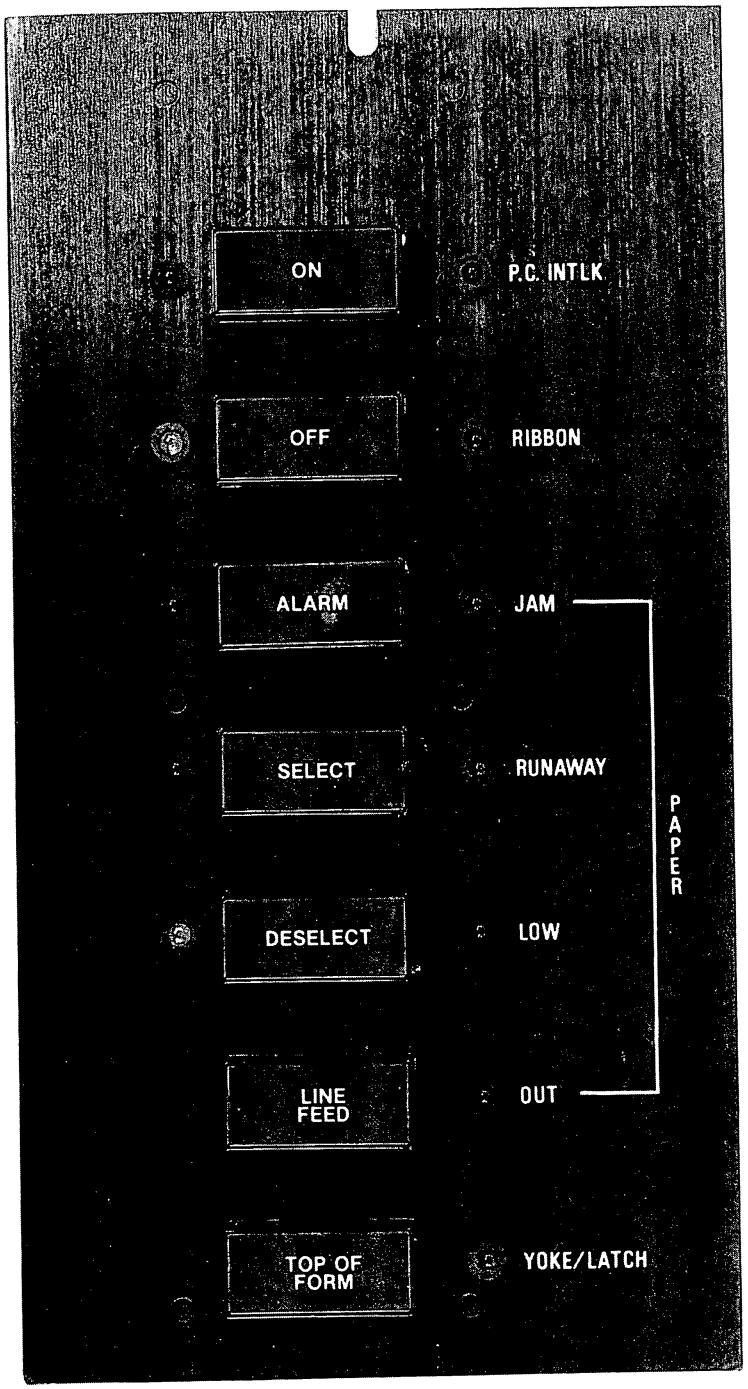

Figure 1-2. Printer Control Panel

1.2 UNPACKING AND INSTALLATION

When you receive your equipment, notify your Wang Service Representative to unpack and set up your printer. Failure to notify your Wang Service Representative will void your warranty.

To install your printer, your Wang Service Representative completes the following procedure.

1. The Printer Controller Board must be installed into the chassis of your system. Its screws must be fully tightened.

2. The 36-pin interface connector must be plugged into the Printer Controller Board and its lock clips placed in the up (locked) position.

3. The power cord from the line printer must be plugged into a wall outlet (see power requirements in Appendix B).

1.3 PAPER INSERTION

1. Raise the canopy to gain access to the printer yoke and open the front doors to gain access to the paper supply area (see Figure 1-3).

2. Release and pivot the yoke by pulling the yoke lever forward and then pulling the yoke forward by its handle.

NOTE

The yoke should be opened only when the printer is in the DESELECT(STOP) mode, or when the printer power is off.

3. Unlock and set the paper tractors to approximate their final position. Normally, the left-hand tractors should be positioned slightly to the left of the first printing position.

4. Open the upper tractor hold-down plates (covers) by pushing the hold-down latches up until the spring-loaded plates snap open. Open the spring-loaded lower tractor hold-down plates by gently pulling up and out on the hold-down plates.

5. Thread the forms, printing side up, through the opening between the open yoke and the lower paper platen and place the forms on the paper tractors with the margin feed holes engaged on the tractor feed pins. (When loading multiple-part forms, fold the first page over before threading so that the parts will not shift while threading.) With the feed holes properly engaged on the feed pins, close the paper hold-down plates.

6. Swing the form-scale into place over the form at the printline by pushing the form scale from the yoke toward the form until it is in place.

7. Horizontally position the paper tractors and forms to the desired print location on the form-scale. Lock the left-hand paper tractors in their final position.

8. Tighten the cross-tension on the form by carefully positioning the right-hand paper tractors. The form should be taut but without distortion of the margin feed holds, which might interfere with the proper feeding. With the form at the desired cross-tension, lock the right-hand paper tractors in their final position.

9. Open the sliding panel at the upper left of the printer to gain access to the Vertical Format Unit (VFU) and the Infinite Forms Position control. Check that the format tape-loop is installed in the VFU.

10. Turn the printer power on and press the Top-of-Form button to advance the paper tractors to the next Top-of-Form position.

11. With the printer in the DESELECT (STOP) mode, adjust the vertical position of the forms by means of the Infinite Forms Position control.

WARNING

Do not attempt to position forms while the printer is operating. This control is directly coupled to the paperfeed drive system and turns as paper is being advanced through the printer.

Decouple the forms control by raising the clutch release lever, and adjust the vertical position of the forms by turning the control knob until the line on which the first line of print is to appear is just visible above the top edge of the form-scale. Engage the paperfeed drive by pressing the clutch release lever back into position against the control knob. Close the upper left side panel.

12. Close and latch the printer yoke. With the yoke lever in the forward (release) position, pivot the yoke to the closed position by pulling up, then pushing in, on the yoke handle until the yoke is fully closed; then push the yoke lever back as far as it will go to secure the yoke.

13. Check for proper initial setting of the Impression and Phasing controls, particularly if the thickness or number of parts of the new form is significantly different than that of the old form (see Section 1.4 for details). Close the canopy.

14. Arrange the forms supply directly under the printer yoke so that the forms will feed straight into the printer. If the forms are fed from a carton, be sure the flaps or any ragged edge on the carton do not snag the forms. Close the paper cabinet doors.

15. Position the paper tray in the mounting holes at the lower rear of the printer. Check that the paper shelf grounding cord is plugged in.

16. Press the SELECT (RUN) button. When printing begins, check for proper printing and forms handling. The first forms fed out of the printer should be guided onto the paper shelf so that they fold properly and lay flat. During operation, the printout should be occasionally pressed down by jostling the stack to lay flat and by pressing down on the paper to squeeze out trapped air.

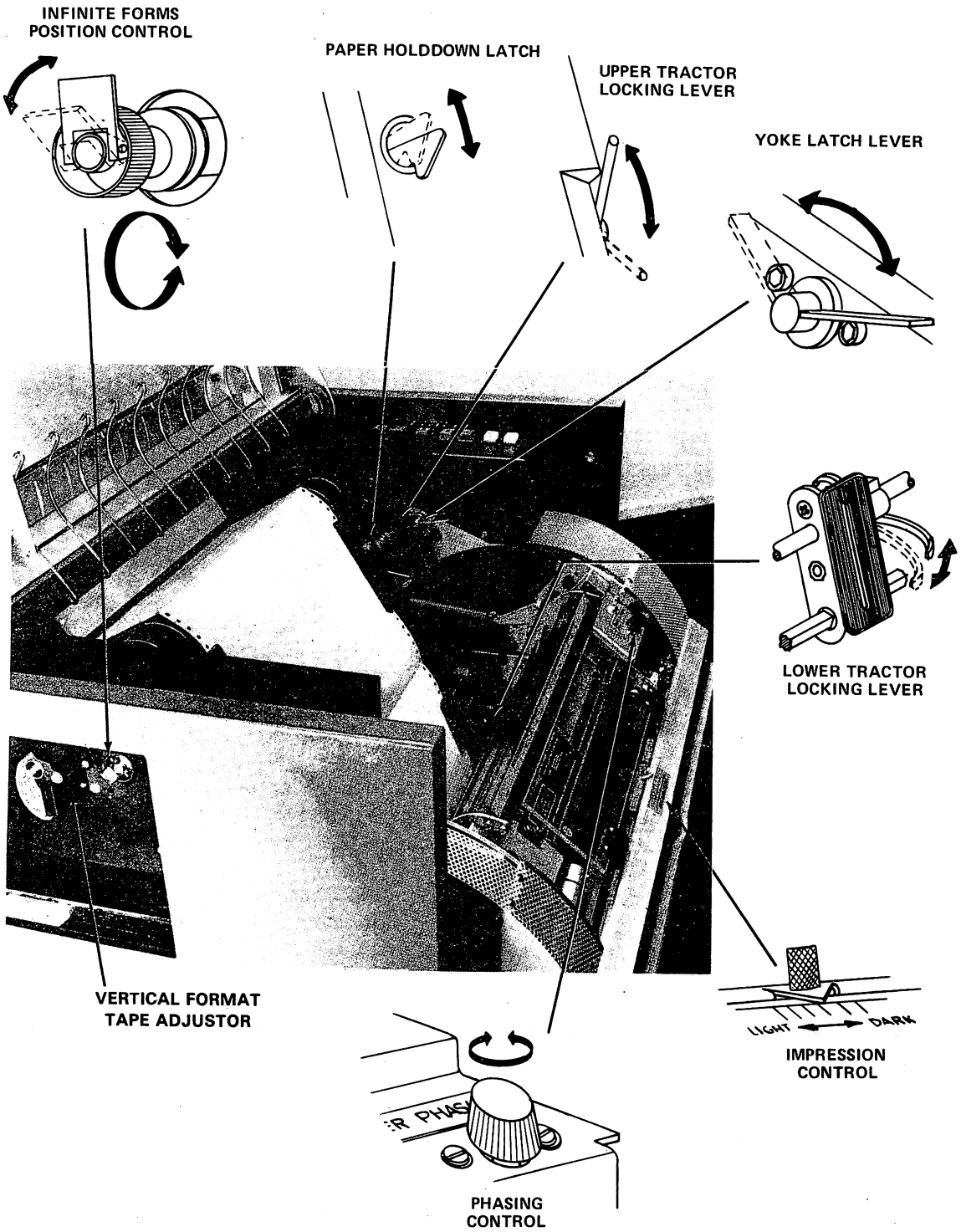

Figure 1-3. Model 2263 Line Printer Components

1.4 PRINT QUALITY ADJUSTMENTS

The Impression and Phasing controls on the printer yoke permit operator adjustment of the print density (darkness of impression) and the horizontal alignment of the printed characters while in operation. To achieve the best possible results, these controls should be adjusted to each application. To ensure satisfactory print quality, the operator should check these adjustments each time a new form and/or new ribbon is installed. To ensure acceptable print quality, certain precautions should be observed.

1. Use the ribbon and form(s) recommended for the application (see Appendix C).
2. Supervise and adjust the print density as required during operation.
3. Replace the ribbon as required.
4. Clean the print-chain as required.

When making print quality adjustments, the Impression control should be adjusted first; the Phasing control may then be adjusted, as these adjustments are interactive.

Print Density

Adjustments to print density are made with the Impression control mechanism (see Figure 1-3). The Impression control moves the chain closer to, or away from, the print hammers permitting adjustment of print impression (darkness) to forms and ribbons of different thicknesses and characteristics. Print impression is adjusted by sliding this control to the left or right. Print impression darkens as the control is slid to the right and lightens when moved to the left.

Generally, the Impression control should be initially set to Light for:

1. Thick forms, in order to avoid smudging.
2. Very thin forms, in order to avoid embossing.
3. Fresh ribbons, in order to avoid extraneous inking.

The Impression control should be set to a position between Light and Dark for average form thicknesses and used ribbons as experience dictates. Because fresh ribbons contain more ink than used ribbons, the initial print density will be relatively heavy for a given setting of the Impression control. The more a ribbon is used, the less ink it contains and the lighter the print density becomes. Therefore, the operator should check the print density at the beginning of, and at intervals during, a print operation, and adjust the Impression control as required to maintain the best possible result.

Character Phasing

The Phasing control permits adjustment of the lateral alignment of character imprints to correct any left- or right-side cutoff. After the Impression control is adjusted, the Phasing control should be adjusted to horizontally align the printout in all print positions for full-character imprints while printing a full width character, such as an "M" or "W", to correct for any left- or right- side cutoff (see Table 1-1). When printing on multiple-part forms, the last, or bottom, part should be checked for proper Phasing adjustment, as any cutoff will be more pronounced on the bottom part than on the top part. The Phasing control can be continually rotated in either direction to adjust alignment.

Chain Cleaning

The print-chain should be cleaned periodically to ensure consistent print quality. During printing, small particles of paper and ink may accumulate in the counters (open spaces) between the lands (raised portion) of the characters on the print-chain. When this accumulation fills the open spaces, the distinctness of the printed character might be affected. Therefore, the chain should be cleaned (with the ribbon removed), first with a vacuum cleaner, then with a soft wire brush and a vacuum cleaner, on a routine basis. When cleaning the chain, a piece of paper should be placed between the open yoke and the print and paper-feed mechanisms to catch the material brushed off on the chain.

Table 1-1. Operator Correctable Printed Character Conditions

Printout	Condition	Adjustment
MMM	Dark Print, Smudging Extraneous Inking	Decrease Impression adjustment
MMM	Light Print, Voids	Increase Impression adjustment
MMM	Left Cutoff	Increase Phasing adjustment for full character imprint in all positions
MMM	Right Cutoff	Decrease Phasing adjustment for full-character imprint positions
MMM	Filled Characters	Clean print-chain

1.5 RIBBON REPLACEMENT

1. Raise the canopy; release and pull out the printer yoke to gain access to the ribbon and ribbonfeed mechanism (shown in Figure 1-4).

2. Swing the form-scale away from the yoke by pushing the form-scale backward, and open the hinged ribbon cover at the top center of the yoke by swinging it toward the front to gain full access to the ribbon and ribbon mandrels.

3. Using the disposable plastic gloves supplied with the new ribbon, push the upper ribbon mandrel to the right, lift out the left end, and remove the mandrel from the mechanism. Temporarily place it on top of the form-scale.

NOTE

To ensure proper operation of the Model 2263 printer, it is recommended that Ribbon #725-0162 be used. It is available from your Wang service representative.

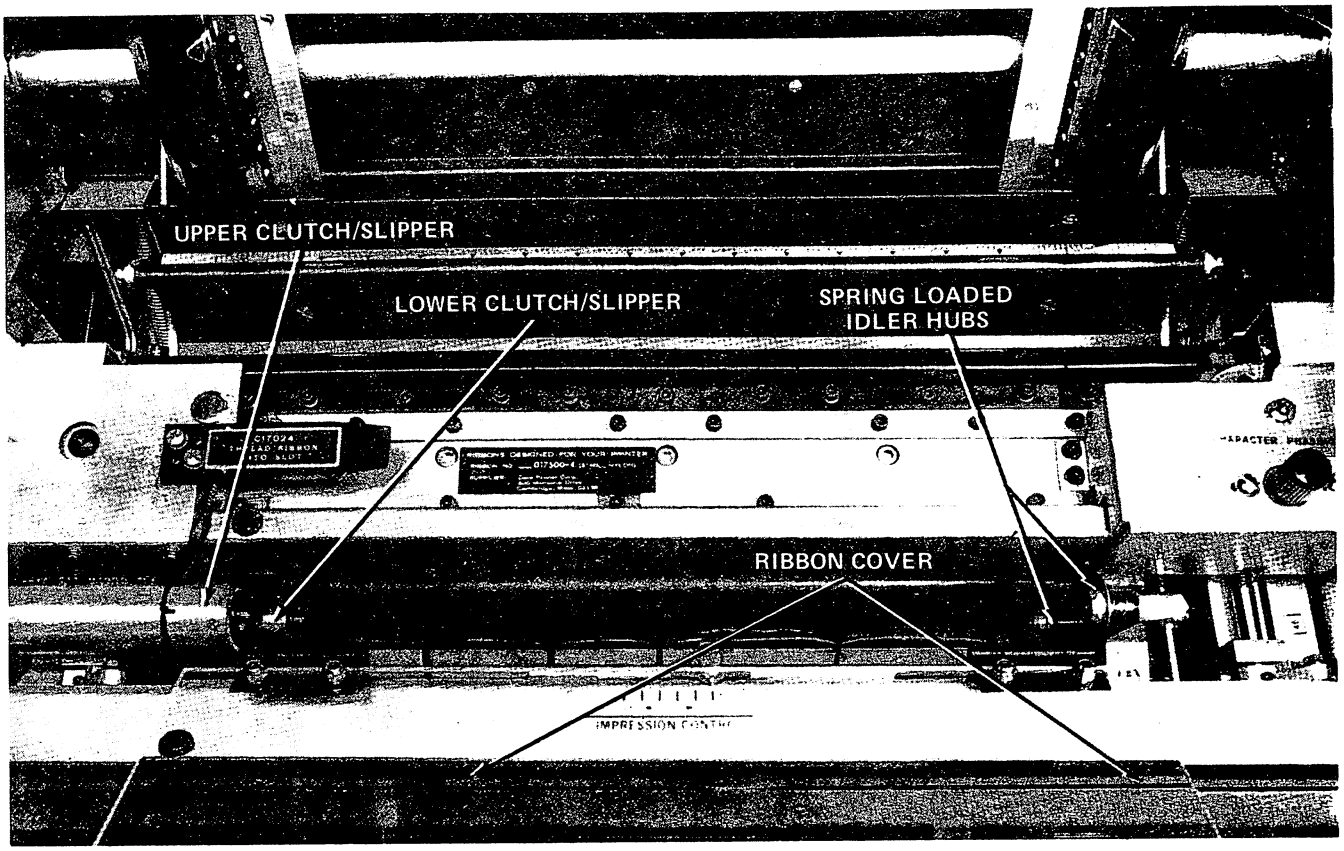

Figure 1-4. Ribbon Feed Mechanism

4. Push the lower ribbon mandrel to the right, lift out the left end, and remove the mandrel from the mechanism. Grasping both mandrels, slide the ribbon slightly to the right to clear the upper and lower ribbon sensors at the left side of the ribbon path, and remove the ribbon from the printer.

5. When installing a new ribbon, load the full mandrel onto the lower ribbon drive first. With the full mandrel positioned so that ribbon winds from the underside (see Figure 1-5), place the right-hand end of the mandrel onto the lower right spring-loaded idler hub, push the mandrel to the right, and place the left end of the mandrel onto the lower left drive hub with one of the notches in the end of the mandrel engaged with the pin on the rim of the drive hub (see Figure 1-6).

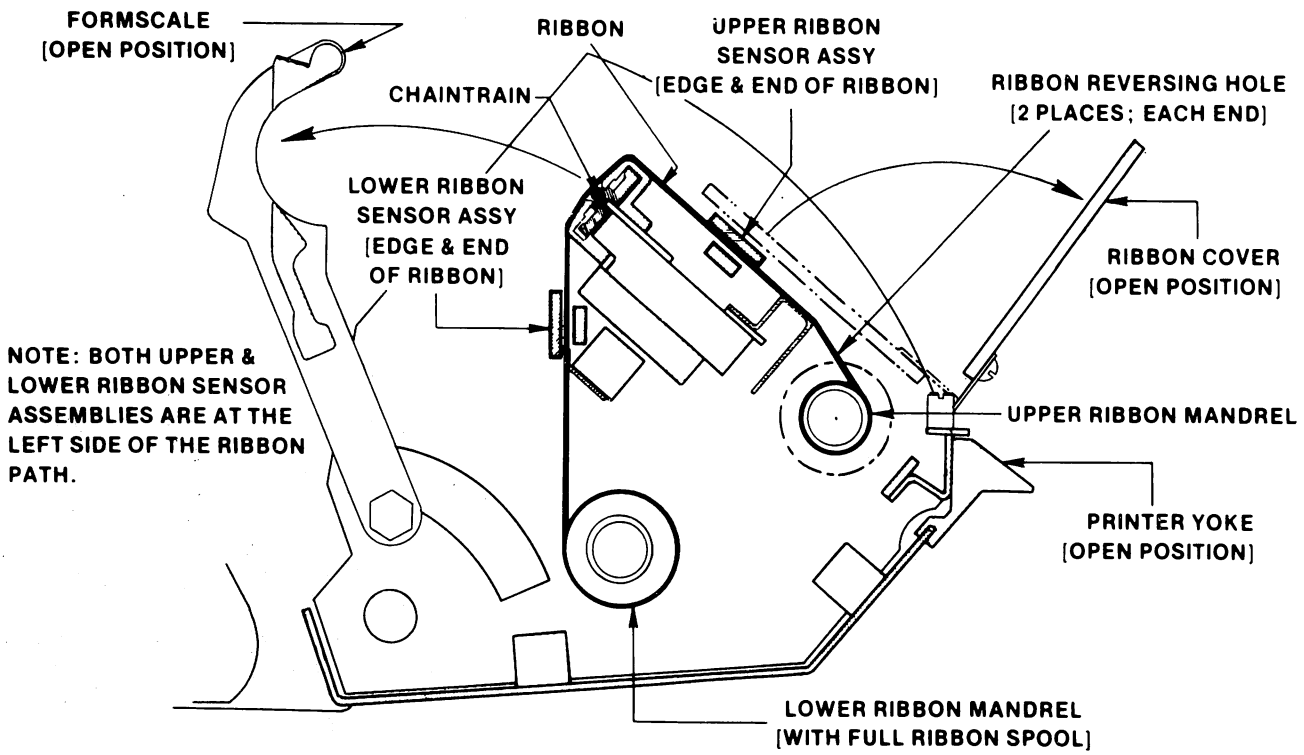

Figure 1-5. Ribbon Path

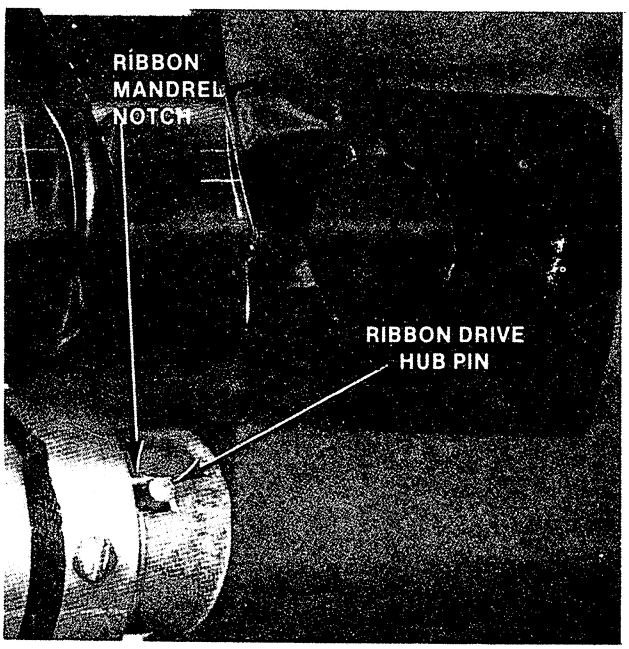

Figure 1-6. Ribbon Drive Hub and Mandrel Notch

6. Wind the ribbon over the chain as shown in Figure 1-5. Be sure the left edge of the ribbon is threaded into the slots of both the lower and upper ribbon sensors.

7. Place the right-hand end of the "empty" mandrel onto the upper right spring-loaded idler hub, push the mandrel to the right, and place the left end of the mandrel onto the upper left drive hub with one of the notches in the end of the mandrel engaged with the pin on the rim of the drive hub. (Ribbon should wind onto the top side of the upper mandrel.)

8. Manually turn the upper ribbon mandrel to take up any slack in the ribbon from in front of the print-chain and ensure that the Ribbon End holes are located between the upper ribbon sensor. Close the ribbon cover.

9. Close and secure the printer yoke. Check for proper settings of the Impression and Phasing controls. Generally, when a fresh ribbon is installed, the Impression control should be set for light print density (refer to Section 1.4 for details). Close the Canopy.

10. When printing begins, check that the ribbon is feeding properly.

NOTE

The upper and lower ribbon sensors should be cleaned on a routine basis, preferably with each ribbon change while the ribbon is removed.

1.6 VERTICAL FORMAT CONTROL

The mechanism that guides and controls paper movement is located on the left side of the printer. The VFU (shown in Figure 5-1) contains a tape reader which provides Top-of-Form and Vertical Tab spacing control via punched tape with holes punched in Channels 1 and 5, respectively. Channel 8 provides an automatic page eject. With this feature, paper automatically advances to the next Top-of-Form hole when the end of a document is reached. The end of a document is normally set at Line 66 of 11-inch forms. Automatic page eject passes over the perforation in fan-fold paper when forms have been properly aligned. Before operating the printer, verify that the paper tape is properly seated in the Vertical Format Unit.

The standard 1-inch wide, 8-channel paper tape has sprocket holes located between Channels 3 and 4, holes for Top-of-Form in Channel 1 and for Vertical Tab in Channel 5. The sprocket holes have a 1/10-inch pitch between the holes. The tape reader and paper-feed mechanisms are mechanically linked so that each line feed advances both the paper one line and the tape one sprocket hole. When the printer receives a Vertical Tab code (HEX(OB)), the tape is advanced to the next hole in Channel 5 and the paper is advanced correspondingly. When the printer receives a Form Feed code (HEX(OC)), or the TOP-OF-FORM switch is pressed, the punched tape is advanced to the next hole in Channel 1 and the paper advances correspondingly. On the standard tape, Vertical Tab holes are spaced six sprocket holes apart [corresponding to a 1-in. tab (2.54 cm) or six lines], and Form Feed holes, 66 sprocket holes apart [corresponding to an 11-in. (27.9 cm) form]. To position the tape at the Top-of-Form holes, press the TOP-OF-FORM switch. The tape provided with the printer should last the life of the printer. Special tapes to produce unique printline spacing can be used with the printer; they must be prepared either with a Teletype tape punch or with manual punching equipment. Problems with Vertical Format Tapes are best resolved by your Wang Service Representative.

1.7 SYSTEM TURN-ON PROCEDURE

1. Verify that all power cords are connected to a source of electrical power and all peripheral cables are connected to the system's CPU.

2. Turn on the system CPU, followed by the DPU, all disk drives, and lastly, all printers and terminals. Refer to your system's CPU manual for Master Initialization instructions.

Master Initialization automatically selects the CRT as the output device. The device address for the printer must be specified using a SELECT statement (see Chapter 2).

1.8 MODEL 2263 CONTROL PANEL

The control panel on the right-hand side of the printer contains a number of switches, buttons, and light indicators for controlling the manual operations of the printer (see Figure 1-2).

ON

To turn the printer on, press the ON button. The button is illuminated when the power is on.

OFF

To turn the printer off, press the OFF button. When the power is off, the OFF button is illuminated. The OFF button is also illuminated whenever a malfunction condition turns on the ALARM lamp.

SELECT (RUN)

After turning on the printer, press the SELECT (RUN) button; the SELECT (RUN) button is illuminated. SELECT (RUN) places the printer in the ready position to receive data from the CPU.

In the Ready position, the printer remains in a stand-by state with the power to the chain and ribbon feed drive motors turned off (both the ON and OFF indicators illuminated) until the transfer of the first print command from the CPU. Similarly, the printer automatically switches to the stand-by state to conserve power if a print command is not transferred within approximately one minute of the last print operation.

DESELECT (STOP)

Pressing the DESELECT (STOP) button halts printing temporarily, without causing loss of data in the print buffer (50 milliseconds are allowed for the completion of the transfer of data to the printer for the current line. The line is then printed and the printer is deselected). To resume printing, press the SELECT (RUN) button.

LINE FEED (ONE LINE)

When the printer is in the DESELECT mode, pressing the LINE FEED (ONE LINE) button advances the paper one line.

TOP OF FORM (HOME)

With the printer on and the DESELECT (STOP) button illuminated, paper is advanced to the Top-of-Form position by pressing the TOP OF FORM (HOME) button. Paper advance is specified by the Top-of-Form position as designated by a punched hole in Channel 1 of the vertical format tape. If no tape is mounted, a one line advance is made.

ALARM

The ALARM indicator is illuminated when a mechanical or electronic malfunction condition exists. The lamp is illuminated for any of the following conditions.

1. Yoke is open
2. Yoke latch is open
3. Paper runaway condition is detected
4. Printer is out of paper, or less than 5 1/2 in. (14 cm) of paper remain below typeline
5. Paper or ribbon jam
6. Hammer driver is not positioned properly. When this condition exists, SELECT (RUN) is inhibited and the printer does not operate.

The ALARM lamp is also illuminated momentarily, at power, turn-on, and turn-off, to provide a lamp check.

If normal corrective action cannot alleviate any of these conditions, shut the printer off. If the problem can not be resolved, contact your Wang Service Representative.

Table 1-2. ALARM Indicator Corrective Actions

Condition	Corrective Action
Yoke open	Attempt to Deselect
Yoke Latch open	Attempt to Deselect
Runaway paper	Press One Line (Line Feed) or Home (Top of Form). Check if format tape is damaged
Out of Paper	Replace paper
Paper or ribbon jam	Replace paper or ribbon

1.9 MODEL 2263 TURN-ON PROCEDURE

1. Ensure that the printer is connected to its Controller Board.
2. Ensure that the printer is plugged into a source of electrical power.
3. Ensure that the tape in the Vertical Format Unit is correctly seated.
4. Insert paper into the printer.
5. Set the Forms Thickness for good print quality. Refer to Section 1.4 for print quality adjustment.
6. Turn on the printer and the other system components in the order recommended by your system user manual.
7. Push SELECT (RUN) to enable the printer to receive data.
8. The line printer is now ready to use.
9. Ensure that the program transferring data to the printer has used the proper device address to SELECT the printer (normally 215).

CHAPTER 2
DEVICE SELECTION IN A PROGRAM

2.1 THE SELECT STATEMENT

The SELECT statement must be used to select the printer as the output device. When the central processer is first powered on, the CRT address 005 is the default selection for print operations. A SELECT statement can be used either in the Immediate mode, or as a statement within a program. When used with the Model 2263, the syntax of the SELECT statement requires that it contain a PRINT, LIST, or CO command, a device type, and unit address. Line length can also be specified. An example of a SELECT statement is as follows.

```
100 SELECT PRINT 215     (120)

    Device Type

    Unit Address

    Line Length
```

If the line length is not specified, it is set to 64, the standard line length of the CRT. In a system with an 80-column CRT, the line length is set to 80.

2.2 DEVICE TYPE CODES

Every peripheral attached to the system is assigned a 3-character Device Type code. The Device code is in the form (xyy), where x is the Device Type and yy is the Unit Address. The Device Type determines which internal system I/O routines are used to control the Printer. The Model 2263 automatically executes a line feed (i.e., advances the paper to a new line) following the execution of a carriage return; the printer is, therefore, usually selected with a device type of 2 (see Table 2-1 for a description of the different device types). Generally, carriage return commands are initiated from the CPU. The printer automatically prints characters in the buffer and executes a carriage return at the end of a 132-character line.

Table 2-1. Device Types

Type	Operation
0	Addresses devices that do not automatically execute a line feed after a carriage return; therefore, the CPU supplies a line feed character after each system-generated carriage return. Output normally single-spaced is double-spaced. Device Type 0 can also be used in the printing of double-spaced program listings. Example: :SELECT PRINT 015(132) :10 FOR J = 1 TO 5 :20 PRINT "HAVE TICKETS READY WHEN BOARDING" :30 NEXT J :RUN (EXECUTE) Output: HAVE TICKETS READY WHEN BOARDING HAVE TICKETS READY WHEN BOARDING HAVE TICKETS READY WHEN BOARDING HAVE TICKETS READY WHEN BOARDING HAVE TICKETS READY WHEN BOARDING
2	Addresses devices that automatically execute a line feed after a carriage return; this Device Type is normally used with the Printer. Output is single-spaced. This is the standard Device Type used with the Model 2263. Example: :SELECT PRINT 215 :10 FOR I = 1 TO 5 :20 PRINT "A SMALL AMOUNT SAVED REGULARLY WILL ADD UP SIGNIFICANTLY" :30 NEXT I :RUN (EXECUTE) Output: A SMALL AMOUNT SAVED REGULARLY WILL ADD UP SIGNIFICANTLY A SMALL AMOUNT SAVED REGULARLY WILL ADD UP SIGNIFICANTLY A SMALL AMOUNT SAVED REGULARLY WILL ADD UP SIGNIFICANTLY A SMALL AMOUNT SAVED REGULARLY WILL ADD UP SIGNIFICANTLY A SMALL AMOUNT SAVED REGULARLY WILL ADD UP SIGNIFICANTLY

Table 2-1. Device Types (continued)

Type	Operation
4	Normally addresses devices, such as plotters, which do not have an automatic carriage return. When addressing a printer, it suppresses the character count in the CPU and the automatic carriage return issued by the CPU at the end of PRINT, PRINTUSING and HEXPRINT statements that contain no trailing punctuation. Normally, when the number of characters in the buffer equals the line length in a SELECT statement, a carriage return is executed. Device 4, however suppresses this feature by not executing a carriage return when the number of characters equals the line length. The carriage return is not executed until the print buffer is full (and a line is printed), or when the carriage return code HEX (OD) is encountered in the program. Example: :SELECT PRINT 415 :10 FOR I = 1 to 5 :20 PRINT "NOW IS THE TIME," :25 PRINT HEX(OD) :30 NEXT I :RUN (EXECUTE) Output: NOW IS THE TIME, NOW IS THE TIME, NOW IS THE TIME, NOW IS THE TIME, NOW IS THE TIME, Device Type 4 is intended for use with Wang plotter peripherals and has very limited applications with the Model 2263. It is recommended that the Model 2263 normally be selected with Device Type 2 or 0.

The device address (yy) of the Model 2263 Printer Controller is preset to 15 before the unit is shipped, and must be the address used in SELECT statements used with the printer. If a second Wang printer is used on the same CPU, it is assigned Device Address 16 by the Wang Service Representative who installs the system. Device Address 15 is used in all further examples in this manual.

2.3 PRINT

The following statement selects the printer with Device Type Code 215 for all program ouput resulting from the execution of PRINT, PRINTUSING, or HEXPRINT statements.

:SELECT PRINT 215

Printout resulting from PRINT statements entered in the Immediate mode appear on the CRT unless the printer is selected for CO (see Section 2.5).

NOTE

When the system is first turned on, print operations are seen on the CRT, the primary device for such operations. Therefore, it is necessary to execute a SELECT statement in the program (or Immediate mode) to direct the output of PRINT statements to the printer. Also, the SELECT (RUN) light must be on.

The following two programs will yield the same output.

```
:10 SELECT PRINT 215
:20 PRINT "X", "2X"
:30 FOR X = 1 TO 5
:40 PRINT X,X*2
:50 NEXT X
```

or

```
:SELECT PRINT 215
:20 PRINT "X", "2X"
:30 FOR X = 1 TO 5
:40 PRINT X,X*2
:50 NEXT X
```

When either of these programs is executed, the printed output is as follows.

```
X          2X
 1          2
 2          4
 3          6
 4          8
 5          10
```

2.4 LIST

The following statement selects the printer with Device Type Code 215 for all program LIST operations.

```
:SELECT LIST 215
```

For example, to list the program in the first example above on the printer, key in as Immediate Mode statements:

```
:SELECT LIST 215
:LIST
```

The printer output is as follows.

```
10 SELECT PRINT 215
20 PRINT "X", "2X"
30 FOR X = 1 TO 5
40 PRINT X,X*2
50 NEXT X
```

NOTE

The default address for LIST operations is 005, the CRT.

2.5 CO (CONSOLE OUTPUT)

The following statement selects the printer with Device Type Code 215 for all console output.

:SELECT CO 215

This includes all system displays such as the READY message; output from STOP and END statements; any data keyed in on the keyboard and entered into the CPU; and all output from Immediate mode operations, TRACE statements, and error messages. A permanent copy of the trace can be useful, for example, when tracing program execution during program debugging.

Example:

Key in as an Immediate mode statement SELECT CO 215, press the RETURN/EXECUTE key and the RESET keys. The output on the printer is as follows.

:READY

All information entered into the CPU via the keyboard is now output on the printer until the system is shut off or until a SELECT CO 005 statement is entered. The actual line does not appear on the printer until a carriage return code is received by the printer.

2.6 LINE LENGTH

The maximum number of characters per line that can be printed on the Model 2263 is 132. To accommodate various paper widths and special forms whose width is less than 132 characters, the length of the output line can be specified by enclosing the desired line length in parentheses following the Device Type code in the SELECT statement. This number is stored in the CPU and indicates the effective line length of the selected device to the System. For example:

SELECT PRINT 215 (132)	Selects the Model 2263 for printing and sets the line length to 132.
SELECT LIST 215 (80)	Selects the Model 2263 for listing programs and sets the line length to 80.
SELECT CO 215 (112)	Selects the Model 2263 for console output and sets the line length to 112.

If a line length is not specified for PRINT, LIST, or CO, the last line lengths selected for these operations are used.

NOTE

The default line length set during Master Initialization is 64 characters (80 characters with an 80-column CRT). The maximum line length which can be specified in a SELECT statement is 255. However, the use of a line length greater than the physical carriage width of a device is not recommended.

The line printer does not print each character as it is received from the CPU. The printer has a buffer for storing each character until the CPU directs it to print a line. The signal from the CPU to print a line is a carriage return code.

The line length setting is used to generate an automatic carriage return when a line exceeds the specified line length and when no carriage return is supplied by the program. This prevents printout from being lost. As a line of output is printed on the Model 2263, the CPU keeps a count of the number of characters sent. If this line count equals the current value of the line length before the output line is complete, a carriage return is transmitted to the printer, the line count is reset to zero, and the unfinished output is continued on the next line. If the output is completed and a carriage return is transmitted before the line count equals the line length, the system automatically resets the line count to zero for the start of a new line (a PRINT or PRINTUSING statement with no trailing comma or semicolon causes a carriage return to be executed at the end of the output). The line count is reset to zero under any one of the following conditions.

1. The line count is equal to the line length.
2. A carriage return is output when a PRINT, PRINTUSING, or HEXPRINT statement is executed.
3. The system is reset.
4. A CLEAR command is executed.
5. The system is Master Initialized.
6. A SELECT PRINT statement is executed.

The following example illustrates the automatic carriage return generated by the selected line length. With this program in memory (note line length is set to 5), the output which follows the program is produced at execution time.

```
10 SELECT PRINT 215 (5)
20 PRINT "THE QUICK BROWN FOX JUMPS OVER THE LAZY DOG"
THE Q
UICK
BROWN
 FOX
JUMPS
 OVER
 THE
LAZY
DOG
```

Note that embedded spaces in the line are included in the character count for each line.

2.7 COMBINED PARAMETERS

It is possible to combine parameters in a SELECT statement.

Example:

```
SELECT LIST 215, LIST 005
```

However, it is not possible to select two output devices with the same parameter. For example, this statement produces listing of programs on the CRT only.

SELECT PRINT 215 (100), LIST 215 (80), CO 215 (132)

2.8 DESELECTING THE MODEL 2263 IN THE CPU

To deselect the printer, use one of the following methods.

1. Select another device for PRINT, LIST, or CO by using the SELECT statement.
2. Master Initialize (turn power off, then on). Master Initialization selects the CRT for all LIST, PRINT, and CO operations.
3. Key in CLEAR and touch the RETURN/EXECUTE key. PRINT and LIST operations are returned to the device currently selected for Console Output (CO). If the printer is currently the CO device, either Method 1 or 2 must be used to deselect it.
4. Turn on the DESELECT (STOP) indicator.

CHAPTER 3
FORMATTING OUTPUT

3.1 PRINT, PRINTUSING, AND HEXPRINT STATEMENTS

The PRINT, PRINTUSING, and HEXPRINT statements are used with the Model 2263 in the same manner as they are used with the CRT, although more printing zones are available on the printer than on the CRT. For instance, the 64-column CRT is divided into four zones of 16 characters each, whereas the printer can have up to nine zones of 16 characters each.

The Model 2263 has a line length of 132 characters, divided into eight zones of 16 characters each, and one zone of four characters. The zones constitute columns 0-15, 16-31, 32-47, 48-63, 64-79, 80-95, 96-111, 112-127, and 128-131.

If commas separate elements in a PRINT statement, each element begins at the start of a new zone. If semicolons separate elements in a PRINT statement, the output appears in packed format, with no spaces between items. (See *Programming in BASIC* (700-3231G) for a discussion of zoned and packed format.)

Example 1:

```
:10 REM PRINTING IN ZONED FORMAT WITH COMMAS
:20 SELECT PRINT 215(132)
:30 PRINT "COLUMNS 0-15", "COLUMNS 16-31", "COLUMNS 32-47"
:RUN (EXECUTE)
```

Output:

```
COLUMNS 0-15      COLUMNS 16-31     COLUMNS 32-47
```

Example 2:

```
:10 REM SKIPPING OVER ZONES WITH COMMAS
:20 SELECT PRINT 215(132)
:30 PRINT "SAMPLE #",,, "CONCENTRATION-%"
:40 PRINT 703,,, .015
:RUN (EXECUTE)
```

Output:

```
SAMPLE #                                          CONCENTRATION-%
 703                                               .015
```

Example 3:

```
:10 REM PRINTING IN PACKED FORMAT WITH SEMICOLONS
:20 SELECT PRINT 215(132)
:30 A$="1976 OLDS" :B$=" TORONADO 4 DR"
:40 PRINT "MAKE:"; A$; B$
:RUN (EXECUTE)
```

Output:

```
MAKE:1976 OLDS TORONADO 4 DR
```

Example 4:

```
:10 REM PRINTUSING FORMAT
:20 SELECT PRINT 215(132)
:30 A$="4-BEDROOM CAPE" :P=45000
:40 PRINTUSING 50, A$,P
:50% ############## PRICE=$##,###
:RUN (EXECUTE)
```

Output:

```
4-BEDROOM CAPE PRICE=$45,000
```

Example 5:

```
:10 REM PRINTING WITH HEXPRINT STATEMENT
:20 A$="ABC DEF GHI JKL"
:30 HEXPRINT A$
:RUN (EXECUTE)
```

Output:

```
41424320444546204748492044B4C20
```

NOTE

In zone printing on the Model 2263, it is important to make sure that information supplied to the last zone does not exceed the legal length of the last zone. If the width is selected to 132, the last zone can contain only four characters (not 16). For instance, if the information for the last zone exceeds four characters, that zone is omitted and the information is presented in the first zone of the next line.

In the following example, the ninth element in Line 20 exceeded four characters and, thus, was printed in the next line since the ninth zone is only four characters in length.

Example:

```
:10 SELECT PRINT 215(132)
:20 PRINT 1.2, 3.4, 5.6, 7.8, 9.0, 5.2, 8.4, 0.5, 45.678
:RUN (EXECUTE)
```

Output:

```
1.2    3.4    5.6    7.8    9.0    5.2    8.4    0.5
45.678
```

3.2 THE TAB(FUNCTION

The TAB(function is used in the same manner with the Printer as it is used with the CRT. When a PRINT statement containing a TAB(function is executed, the Model 2263 prints at the column specified by the integer portion of the TAB(expression.

Example:

```
:SELECT PRINT (132)
:10 PRINT TAB( 75); "MASTER SCHEDULE"
:20 PRINT :PRINT
:30 PRINT TAB(40); "EMPLOYEE"; TAB(70);
"DEPARTMENT"; TAB(110); "SHIFT";
TAB(120); "OVERTIME"
:RUN (EXECUTE)
```

Output:

```
                    MASTER SCHEDULE

EMPLOYEE                DEPARTMENT                          SHIFT     OVERTIME
```

In the above example "MASTER SCHEDULE" is printed starting at Column 75; the subtitles in Line 30 are printed at the specified TAB settings.

If the value of TAB(expression is greater than the selected line length, the printer moves to the next line and completes the PRINT statement starting at Column 0.

Example:

```
:10 SELECT PRINT 215(60)
:20 A=20
:30 PRINT TAB( A); "MODEL"; TAB(3*A); "HORSEPOWER"
:RUN (EXECUTE)
```

Output:

```
                    MODEL
HORSEPOWER
```

When using the TAB(function to print numeric values, an additional column (to the left of the value) is allocated for the sign (+ or -). If not used (for positive numbers), actual printing begins at the column specified plus one.

Example:

```
:10 SELECT PRINT 215(100)
:20 PRINT TAB(10); "POWER"
:30 FOR N = 1 TO 10
:40 PRINT TAB(10); (-2) N
:50 NEXT N
:RUN (EXECUTE)
```

Output:

```
POWER
-2
 4
-8
 16
-32
 64
-128
 256
-512
 1024
```

CHAPTER 4
HEX CODES

4.1 THE HEX FUNCTION

The HEX function is used in a BASIC program to print characters where the specific character codes can be explicitly identified in hexadecimal notation, and to output special Printer Control Codes. The HEX function has the following form.

HEX (hh hh .. .)

where h = a hex digit 0 to 9 or a letter A to F.

An even number of hex digits must always appear in a HEX functon; spaces are not allowed. See the *Wang BASIC-2 Language Reference Manual* (700-4080D) for hexadecimal characters and codes. HEX codes for characters and/or printer control can be combined. For example, since the ASCII code for 'A' is HEX(41), 'carriage return' is HEX(0D), 'line feed' is HEX(0A), and 'B' is HEX(42), the HEX statement in the following program produces the specified output (refer to Appendix A for a complete listing of the ASCII codes for the Model 2263 Line Printer).

Example:

```
:10 SELECT PRINT 215
:20 PRINT HEX(410D0A42)
:RUN
```

Output:

```
A

B
```

4.2 CONTROL CODES

When the Model 2263 printer receives a hex code for a printable character, it simply places the code into its print buffer. Unless the buffer is full, no immediate action is taken. However, certain special hex codes do not enter the buffer, and, instead, cause immediate action by the printer. These special codes are the printer control codes.

Table 4-1. Special Control Codes

Function	Hex Code	Description
LINE FEED	HEX(0A)	Advances paper one line.
VERTICAL TAB	HEX(0B)	Advances paper until the next hole in Channel 5 of the Vertical Format Unit paper tape is reached.
FORM FEED	HEX(0C)	Advanced paper until the next hole in Channel 1 of the Vertical Format Unit paper tape is reached.
CARRIAGE RETURN	HEX(0D)	Causes the line of characters stored in the printer buffer to be printed. An automatic line feed occurs after the line has been printed.

NOTE

When hex codes are combined in a single statement line, control codes are executed as they occur.

Example:

```
10 PRINT HEX(57414E470D0A4C414253)
```

Output:

```
WANG

LABS
```

CHAPTER 5
THE VERTICAL FORMAT TAPE

5.1 FORMAT TAPE MOUNTING

The procedure for mounting the vertical format tape is as follows.

1. Place the printer in the DESELECT (STOP) mode and open the sliding panel at the upper left side of the printer to gain access to the Vertical Format Unit. (See Figure 5-1.)

2. Raise the spring-loaded tape down and carefully remove the old tape by lifting it up to clear the feed pins.

3. Orient the tape loop so that the narrow, 3-channel side of the tape is on the left side of the loop, as viewed from the front of the printer.

4. Insert the tape loop into the narrow gap between the tape guides and place the top of the loop over the tape drive sprocket so that the feed pins engage the feed holes in the tape.

5. Lightly holding the tape loop taut, lower the tape hold-down.

6. Press the TOP OF FORM (HOME) switch to position the tractors, and close the sliding panel.

Figure 5-1. Vertical Format Unit

5.2 TO COPY A VERTICAL FORMAT TAPE

To produce a copy of the tape supplied with the printer, either a Teletype or a manual punch can be used. On a Teletype, insert master tape in reader and lock it in; turn the switch to START.

To produce a new master tape on a Teletype:

1. Turn the LOCAL switch to its extreme clockwise position.
2. Turn the PUNCH switch on.
3. Press the HERE IS key several times (to generate leader).
4. For a Top-of-Form hole (in Channel 1), press and hold the CONTROL key, and press A. For a Vertical Tab hole (in Channel 5), press and hold the CONTROL key, and then press P. For a combination of Top-of-Form and Vertical Tab holes (in Channels 1 and 5), press and hold the CONTROL key, and then press Q. To generate sprocket holes (one space at a time), press and hold CONTROL and SHIFT, and then press P for each hole.
5. For an end-of-document hole (in Channel 8), press the CONTROL key, and then press Z.
6. When new tape is complete, press the HERE IS key to generate ending trailer; remove the tape from reader.

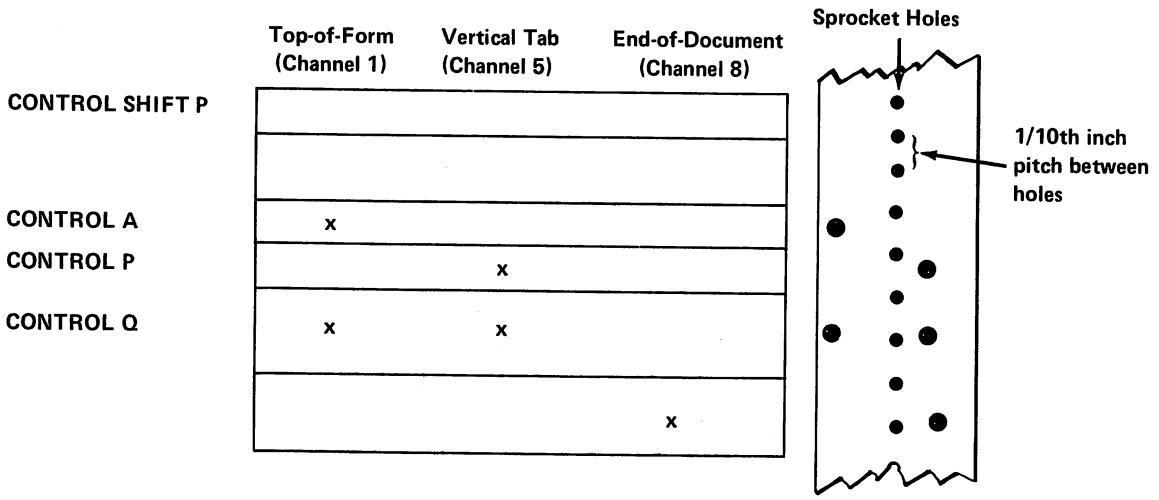

Figure 5-2. Vertical Format Tape

5.3 TO SPLICE PREPARED TAPE

Overlay ends of prepared tape so that punched holes are properly spaced (see Figure 5-2); use perforated splicing tape to hold ends together.

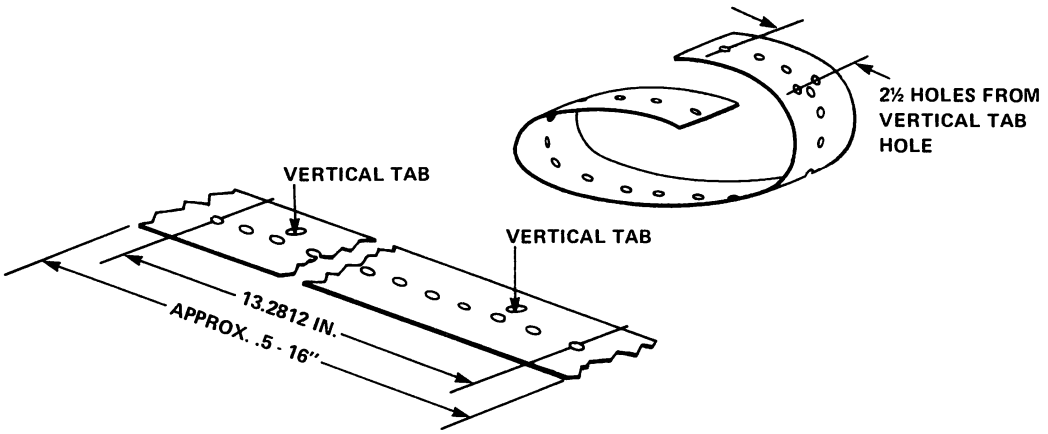

Figure 5-3. Splicing Prepared Tape

APPENDIX A
HEXADECIMAL CODES

Table A-1. Hexadecimal Printer Control Codes for Models 2263-1 and 2263-2

HEX Code	Printer Control
HEX(0A)	Line Feed
HEX(0B)	Vertical Tab
HEX(0C)	Form Feed
HEX(0D)	Carriage Return
HEX(20)	Space

Table A-2. Hexadecimal Character Codes for Models 2263-1 and 2263-2

HEX Code	Printer Character	HEX Code	Printer Character	HEX Code	Printer Character
HEX(21)	!	HEX(36)	6	HEX(4B)	K
HEX(22)	"	HEX(37)	7	HEX(4C)	L
HEX(23)	#	HEX(38)	8	HEX(4D)	M
HEX(24)	$	HEX(39)	9	HEX(4E)	N
HEX(25)	%	HEX(3A)	:	HEX(4F)	O
HEX(26)	&	HEX(3B)	;	HEX(50)	P
HEX(27)	'	HEX(3C)	<	HEX(51)	Q
HEX(28)	(	HEX(3D)	=	HEX(52)	R
HEX(29)	)	HEX(3E)	>	HEX(53)	S
HEX(2A)	*	HEX(3F)	?	HEX(54)	T
HEX(2B)	+	HEX(40)	@	HEX(55)	U
HEX(2C)	,	HEX(41)	A	HEX(56)	V
HEX(2D)	-	HEX(42)	B	HEX(57)	W
HEX(2E)	.	HEX(43)	C	HEX(58)	X
HEX(2F)	/	HEX(44)	D	HEX(59)	Y
HEX(30)	0	HEX(45)	E	HEX(5A)	Z
HEX(31)	1	HEX(46)	F	HEX(5B)	[
HEX(32)	2	HEX(47)	G	HEX(5C)	\
HEX(33)	3	HEX(48)	H	HEX(5D)	]
HEX(34)	4	HEX(49)	I	HEX(5E)	^
HEX(35)	5	HEX(4A)	J	HEX(5F)	_

NOTE

On Models 2263-1 and 2263-2, HEX(61) through HEX(7A) default to print the uppercase alphabet A through Z. All other codes not listed in the above chart are null codes.

HEX (OA) - HEX(5F) print the same characters on the 2263-3 as on the 2263-1 and 2263-2.

Table A-3. Hexadecimal Codes for Model 2263-3

HEX Code	Printer Character	HEX Code	Printer Character
HEX(60)	`	HEX(70)	p
HEX(61)	a	HEX(71)	q
HEX(62)	b	HEX(72)	r
HEX(63)	c	HEX(72)	s
HEX(64)	d	HEX(74)	t
HEX(65)	e	HEX(75)	u
HEX(66)	f	HEX(76)	v
HEX(67)	g	HEX(77)	w
HEX(68)	h	HEX(78)	x
HEX(69)	i	HEX(79)	y
HEX(6A)	j	HEX(7A)	z
HEX(6B)	k	HEX(7B)	{
HEX(6C)	l	HEX(7C)	|
HEX(6D)	m	HEX(7D)	}
HEX(6E)	n	HEX(7E)	~
HEX(6F)	o		

NOTE

All codes not listed in the above chart or on the previous page are null codes.

APPENDIX B
PRINTER SPECIFICATIONS

Printout Speed	Model 2263-1: 400 lines per minute Model 2263-2: 600 lines per minute Model 2263-3: 430 lines per minute
Character Configuration	Letter Gothic standard print 10 characters/in. (4/cm)
Line Width	132 Characters
Character Set	Model 2263-I: 64 character (uppercase ASCII) Model 2263-2: 64 character (uppercase ASCII) Model 2263-3: 96 character (uppercase/-lowercase ASCII)
Duplicate Copies	Up to 5 copies in addition to the original
Printer Size: Width	36.5 in. (92.7 cm)
Depth	32.0 in. (81.3 cm)
Height	42.0 in. (106.7 cm)
Weight	570 lb (258.5 kg).
Fuses	A circuit breaker is located behind the lower right side
Power Requirement	115 or 230 VAC ± 10%, 50 or 60 Hz ± 1 Hz. 732 Watts
Heat Dissipation	2,700 Btu per hour
Cable	12 ft (3.66 m) power cord with 3-prong plug interface cables, maximum 50 ft (15.2 m)
Operating Environment	40°F to 95°F (4.4°C to 35°C) 40 to 80% relative humidity, non-condensing

APPENDIX C
PAPER SPECIFICATIONS

If paper does not conform to these specifications, degraded forms handling can occur. No specifications are given for card stock; try a sample before purchasing.

1. Material must be margin-perforated fanfold paper; perforations are used for guiding by pin-feed units.

2. Maximum form length is not to exceed 11 in. (27.9 cm).

3. Paper Stock:

   a. For single part forms use 15 to 20 lb bond (20 lb for improved forms handling).

   b. For multipart forms use:

      2 ply: 15/15 lb bond, 7 lb carbon
      3 ply: 15/12/15 lb bond, 7 lb carbon
      4 ply: 12/12/12/15 lb bond, 7 lb carbon
      5 ply: 12/12/12/12/15 lb bond, 5 lb carbon
      (up to five copies in addition to the original can be used).

   c. Form width must be:

      3.5 in. (8.9 cm) minimum
      19.5 in. (49.5 cm) maximum

4. Fastening of multipart forms:

   a. Improved multipart paper handling can be achieved with glued margins.

   b. Multipart forms must otherwise be fastened with crimps every 2 in. (5.1 cm) along both edges of the forms.

   c. Crimps must not come closer to the fanfold than 0.50 in. (1.27 cm).

   d. Each crimp must have four prongs - two to enter both form and carbon and two to enter forms only.

5. Forms thickness:

   a. Maximum in the print area: 0.02 in. (0.5 cm) (allows for five 12 lb, one 15 lb and four 7 lb carbon parts).

   b. Over crimps in the pin-feed margin: 0.030 in. (0.076 cm).

6. Sprocket holes:

   a. Must run along both margins 0.25 ± 0.03 in. (0.635 ± 0.076 cm) from paper edge to the hole center lines.

   b. Distance between hole centers along the margins must be 0.5 ± 0.005 in. (1.27 ± 0.013 cm) non-accumulative in any 5 in. (12.7 cm) length.

   c. Hole diameters must be 0.156 ± 0.005 in. (0.396 ± 0.013 cm). The two top and bottom drive holes on each sheet (four per sheet) can be up to 0.200 in. (0.508 cm) in diameter to permit post or ring binding of output.

   d. Distance between hole centers across the sheet must be uniform within 0.015 in. (0.038 cm) to a maximum of 14 1/2 in. (36.83 cm).

7. When using forms with wide and narrow copies in the same set, the top copy should always be of the fullest width.

8. For pre-printed forms:

   a. Pin-hole center to left side of leftmost character not less than 3/8 ± 1/16 in. (1.0 ± 0.2 cm).

   b. Pin-hole center to right side of last character not less than 3/8 ± 1/16 in. (1.0 ± 0.2 cm).

INDEX

PREVENTIVE MAINTENANCE INFORMATION

MAINTENANCE

It is recommended that your equipment be serviced quarterly. A Maintenance Agreement is available to assure this servicing automatically. If no Maintenance Agreement is acquired, any servicing must be arranged for by the customer. A Maintenance Agreement protects your investment and offers the following benefits:

Preventive Maintenance: Your equipment is inspected quarterly for worn parts, lubricated, cleaned, and updated with engineering changes, if any. Preventive maintenance minimizes "downtime" by anticipating repairs before they are necessary.

Fixed Annual Cost: When you buy a maintenance agreement, you issue only one purchase order for service for an entire year and receive one annual billing; more frequent billing can be obtained, if desired.

Further information regarding Maintenance Agreements can be acquired from your local Sales Service Office.

NOTE

Wang Laboratories, Inc., does not guarantee or honor maintenance agreements for any equipment modified by the user. Damage to equipment incurred as a result of this is the financial responsibility of the user.

To help us to provide you with the best manuals possible, please make your comments and suggestions concerning this publication on the form below. Then detach, fold, tape closed and mail to us. All comments and suggestions become the property of Wang Laboratories, Inc. For a reply, be sure to include your name and address. Your cooperation is appreciated.

700-4251B

TITLE OF MANUAL MODEL 2263 LINE PRINTER USER MANUAL

COMMENTS:

Fold

Fold

(Please tape, Postal regulations prohibit the use of staples.)

WANG

Fold

NO POSTAGE NECESSARY IF MAILED IN THE UNITED STATES

BUSINESS REPLY CARD

FIRST CLASS PERMIT NO. 16 LOWELL, MA

POSTAGE WILL BE PAID BY ADDRESSEE

WANG LABORATORIES, INC.
ONE INDUSTRIAL AVENUE
LOWELL, MASSACHUSETTS 01851

Attention: Technical Writing Department

Fold

Cut along dotted line.

Printed in U.S.A.
13-1019

International Representatives

American Samoa
Argentina
Bahrain
Bolivia
Botswana
Brazil
Canary Islands
Chile
Columbia
Costa Rica
Cyprus
Denmark
Dominican Republic
Ecuador
Egypt
El Salvador
Finland
Ghana
Greece
Guam
Guatemala
Haiti
Honduras
Iceland
India
Indonesia
Ireland
Israel
Italy
Ivory Coast
Jamaica
Japan
Jordan
Kenya
Korea
Kuwait
Lebanon
Liberia
Malaysia
Mexico
Morocco
Nigeria
Norway
Paraguay
Peru
Philippines
Portugal
Qatar
Saudi Arabia
Senegal
South Africa
Spain
Sri Lanka
Sudan
Syria
Thailand
Turkey
United Arab Emirates
Uruguay
Venezuela
Yugoslavia

United States

Alabama
Birmingham
Mobile

Alaska
Anchorage

Arizona
Phoenix
Tucson

California
Culver City
Emeryville
Fountain Valley
Fresno
Inglewood
Sacramento
San Diego
San Francisco
Santa Clara
Ventura

Colorado
Englewood

Connecticut
New Haven
Stamford
Wethersfield

District of Columbia
Washington

Florida
Hialeah
Jacksonville
Orlando
Tampa

Georgia
Atlanta
Savannah

Hawaii
Honolulu

Idaho
Boise

Illinois
Chicago
Morton
Oak Brook
Park Ridge
Rock Island
Rosemont
Springfield

Indiana
Carmel
Indianapolis
South Bend

Iowa
Ankeny

Kansas
Overland Park
Wichita

Kentucky
Louisville

Louisiana
Baton Rouge
Metairie

Maryland
Rockville
Towson

Massachusetts
Boston
Burlington
N. Chelmsford
Lawrence
Littleton
Lowell
Tewksbury
Worcester

Michigan
Kalamazoo
Kentwood
Okemos
Southfield

Minnesota
Minneapolis

Missouri
Creve Coeur
St. Louis

Nebraska
Omaha

Nevada
Las Vegas

New Hampshire
Manchester

New Jersey
Bloomfield
Toms River

New Mexico
Albuquerque

New York
Albany
Fairport
Liverpool
New York City
Syosset
Tonawanda

North Carolina
Charlotte
Greensboro
Raleigh

Ohio
Akron
Cincinnati
Cleveland
Independence
Toledo
Worthington

Oklahoma
Oklahoma City
Tulsa

Oregon
Eugene
Portland

Pennsylvania
Allentown
Camp Hill
Erie
Philadelphia
Pittsburgh
State College
Wayne

Rhode Island
Providence

South Carolina
Charleston
Columbia

Tennessee
Chattanooga
Knoxville
Memphis
Nashville

Texas
Austin
Dallas
Houston
San Antonio

Utah
Salt Lake City

Vermont
Montpelier

Virginia
Newport News
Norfolk
Richmond

Washington
Richland
Seattle
Spokane

Wisconsin
Appleton
Brookfield
Green Bay
Madison
Wauwatosa

International Offices

Australia
Wang Computer Pty., Ltd.
Adelaide
Brisbane
Canberra
Milsons Point (Sydney)
South Melbourne
West Perth

Austria
Wang Gesellschaft, m.b.h.
Vienna

Belgium
Wang Europe, S.A.
Brussels
Erpe-Mere

Canada
Wang Laboratories (Canada) Ltd
Burlington, Ontario
Burnaby, B.C.
Calgary, Alberta
Don Mills, Ontario
Edmonton, Alberta
Montreal, Quebec
Ottawa, Ontario
Toronto, Ontario
Victoria, B.C.
Winnipeg, Manitoba

France
Wang France, S.A.R.L.
Bagnolet, (Paris)
Discheim (Strassbourg)
Ecully (Lyon)
Nantes
Toulouse Cedex

Hong Kong
Wang Pacific Ltd.
Hong Kong

Japan
Wang Computer Ltd.
Tokyo

Netherlands
Wang Nederland B.V.
IJsselstein
Gronigen

New Zealand
Wang Computer Ltd.
Auckland
Wellington

Panama
Wang de Panama (CPEC) S.A.
Panama City

Puerto Rico
Wang Computadoras
San Juan

Singapore
Wang Computer (Pte) Ltd.
Singapore

Sweden
Wang Skandinaviska AB
Malmo
Stockholm (Solna)
Groteborg

Switzerland
Wang S.A./A.G
Zurich
Bern
Geneva
Lausanne

Taiwan
Wang Industrial Co.
Taipei
Kaohsiong

United Kingdom
Wang (UK) Ltd.
Birmingham
London
Manchester
Richmond

West Germany
Wang Laboratories, GmbH
Frankfurt
Berlin
Dusseldorf
Essen
Freiburg
Hamburg
Hannover
Kassel
Koln
Munchen
Nurnberg
Saarbrucken
Stuttgart

WANG LABORATORIES, INC.
ONE INDUSTRIAL AVENUE, LOWELL, MASSACHUSETTS 01851, TEL. (617) 459-5000, TWX 710 343-6769, TELEX 94-7421

Printed in U.S.A.
700-4251B
1-81-1M